AVORA DOORS

Neo Casement

European Precision, North American Vision

At Avora Doors, we understand it's not just about windows — it's about how they enhance your home.
That's why our Neo Casement is designed to blend seamlessly with your space, combining modern elegance, functionality, and lasting performance.

Contact Us

Phone:
+1 512-522-2284

Email:
info@avoradoors.com

Website:
www.AvoraDoors.com

AVORA DOORS

neo casement

uPVC Window profile systems built to shine

- Construction depth of 3 3/8 inches (85 mm)
- Nailing fin set-back from exterior: 1 1/4 inches (32 mm)
- Flexible accessory groove for a wide range of attachments
- German profile design parameters and wall thickness standards
- Custom-engineered nailing fin built to withstand high thermal and mechanical stress; pre-punched for easier new-construction installation
- Best-in-class performance for wind load, air tightness, and water resistance
- Designed to meet Residential (R), Light Commercial (LC), and Commercial (CW) window classes in North America
- High structural performance with integrated steel reinforcements
- Integrated fly screen channel optimized for FlexScreen® systems
- Designed and tested for compatibility with leading North American hardware brands
- Frame U-value: up to 1.0 W/m²K (0.18 BTU/h·ft²·°F)
- Window U-value: up to 0.87 W/m²K (0.15 BTU/h·ft²·°F) (with glazing U-value of 0.6 W/m²K)
- Available models: Casement, Awning, and Picture windows
- Suitable for renovations/retrofitting and new construction
- Glass and infill thickness up to 46 mm in the sash
- Available in multiple décor options: Woodec, Aludec, and Farbwelt

Extra rigid nailing fin

Modern and timeless cubic design

Dry glazed with triple seal and co-extruded gaskets

dark grey base carrier

Technical Specifications

Feature	Specification
Construction Depth	3 3/8 in (85 mm)
Nailing Fin Set-Back	1 1/4 in (32 mm)
Structural Reinforcement	Integrated steel reinforcement
Performance Class	R, LC, CW (North America)
Frame U-Value	Up to 1.0 W/m²K (0.18 BTU/h-ft². °F)
Window U-Value	Up to 0.87 W/m²K (0.15 BTU/h.ft². °F)
Max Glass Thickness	Up to 46 mm
Installation Type	Retrofit & New Construction
Available Models	Casement, Awning, Picture
Finish Options	Woodec, Aludec, Farbwelt

1)with standard-triple-glazing with Ug = 0,7 and Psi = 0,040 W/mK
2)with triple-glazing with Ug = 0,4 and Psi = 0,030 W/mK

neo casement

AVORA DOORS

Engineered in Germany, Perfected by Avora Doors for North America — uPVC windows that outperform expectations.

The North American crank casement window has long been a timeless favorite, combining everyday functionality with classic appeal. At Avora Doors, we elevate this trusted design to meet modern performance standards without compromising its character. Featuring a side-hinged structure and smooth crank mechanism, it opens outward to provide maximum ventilation and clear, unobstructed views. Its versatility allows it to complement both traditional and contemporary homes, while high-quality seals and advanced glazing ensure excellent energy efficiency. Homeowners appreciate its effortless operation, low maintenance, and ability to capture natural breezes — making it a practical yet refined solution for enhancing comfort and curb appeal.

When enhanced by German engineering, the crank casement system becomes a high-performance solution that sets a new benchmark. Precision-crafted multi-chambered profiles, triple-glazing options, and advanced airtight sealing dramatically improve thermal efficiency — ideal for demanding climates. A distinctive innovation is the interior glazing method, where the glass is installed from the inside rather than the exterior, ensuring a tighter fit, improved security, and easier maintenance. The result is superior insulation, reduced energy costs, and long-term durability — all while preserving the trusted crank design homeowners value.

Smooth, Effortless Crank Mechanism

Designed for effortless operation, the precision crank system allows smooth and controlled opening and closing with minimal effort. Its ergonomic design enhances comfort and usability, delivering the convenience and reliability homeowners expect from a premium American-style casement window.

Perfect Fit with Flexible Flyscreen

The advanced flyscreen system, engineered with an additional joint for enhanced flexibility, adapts seamlessly to various window positions. This thoughtful design ensures a secure fit, improved durability, and simplified installation and maintenance for homeowners.

System highlights

Discover the ultimate in window innovation with Avora Doors' German-engineered North American crank casement system — thoughtfully designed to elevate both performance and style. Here's what sets it apart:

AVORA DOORS

Interior Glazing

Glass installed from the inside enhances security, ensures a precise and tighter fit, and simplifies maintenance
— eliminating exterior installation challenges.

Superior Energy Efficiency

Advanced multi-chambered profiles, triple-glazing options, and airtight sealing systems deliver exceptional insulation performance, reducing energy costs while maintaining year-round comfort.

High Static Performance with Steel Reinforcement

Integrated steel reinforcement within the sash provides outstanding strength and stability, engineered to withstand heavy wind loads and harsh weather conditions.

European Wall Thickness Standards

Thicker, more robust frame construction minimizes flex, increases rigidity, and ensures long-term durability and reliability.

Integrated nailing fin

With a solid 3–4 mm thickness, the integrated nailing fin enhances structural strength while allowing for easier, more secure handling and installation.

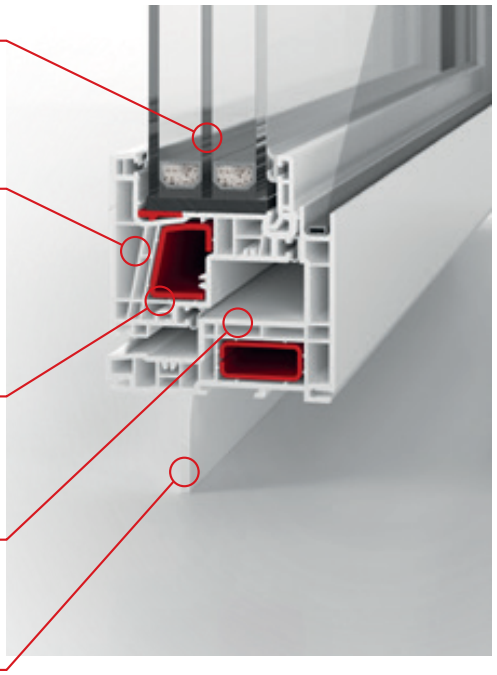

Smooth, Reliable Operation

Precision German engineering ensures effortless cranking and consistently smooth performance — even in extreme climates.

This high-performance casement system by Avora Doors seamlessly combines advanced European engineering with North American design preferences, delivering a window solution that is as durable as it is refined.

Maximum Insulation

Glass and infill thickness up to 46 mm for double or triple glazing

Innovative Seals

High-tech thermoplastic co-extruded gaskets for optimal performance

WOODEC COLORS

ALUDEC COLORS